DocuSign Envelope ID: 85A5664C-570F-47C7-8C38-D5CF185A29D5

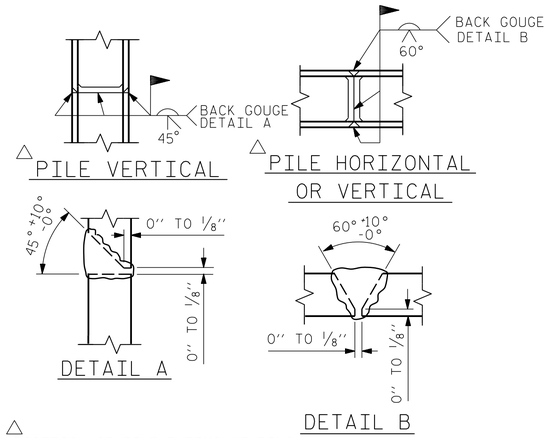


△ POSITION OF PILE DURING WELDING.

## PILE SPLICE DETAILS

## BAR TYPES

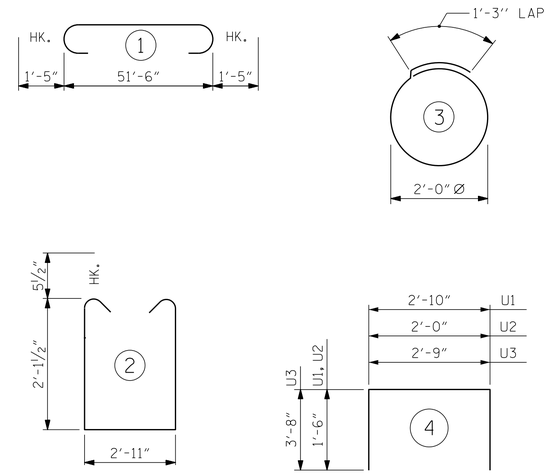


ALL BAR DIMENSIONS ARE OUT TO OUT.

## BILL OF MATERIAL

### BENT 1

| BAR | NO. | SIZE | TYPE | LENGTH | WEIGHT |
|---|---|---|---|---|---|
| B1 | 4 | #10 | 1 | 54'-3" | 935 |
| B2 | 4 | #10 | STR | 51'-8" | 889 |
| B3 | 4 | #5 | STR | 51'-8" | 216 |
| B4 | 8 | #4 | STR | 27'-1" | 145 |
| B5 | 13 | #4 | STR | 2'-11" | 25 |
| | | | | | |
| D1 | 44 | #6 | STR | 1'-6" | 99 |
| | | | | | |
| S1 | 52 | #5 | 2 | 8'-1" | 438 |
| S2 | 18 | #4 | 3 | 7'-7" | 91 |
| | | | | | |
| U1 | 4 | #4 | 4 | 5'-10" | 16 |
| U2 | 6 | #4 | 4 | 5'-0" | 20 |
| U3 | 2 | #9 | 4 | 10'-1" | 69 |
| | | | | | |

REINFORCING STEEL 2943 LBS

CLASS A CONCRETE BREAKDOWN

TOTAL CLASS A CONCRETE 15.6 C.Y.

HP 14 X 73 GALVANIZED STEEL PILES

No. 9 LIN. FT. 774

PILE DRIVING EQUIPMENT SETUP FOR HP 14 X 73 GALVANIZED STEEL PILES NO: 9

PILE REDRIVES NO: 5

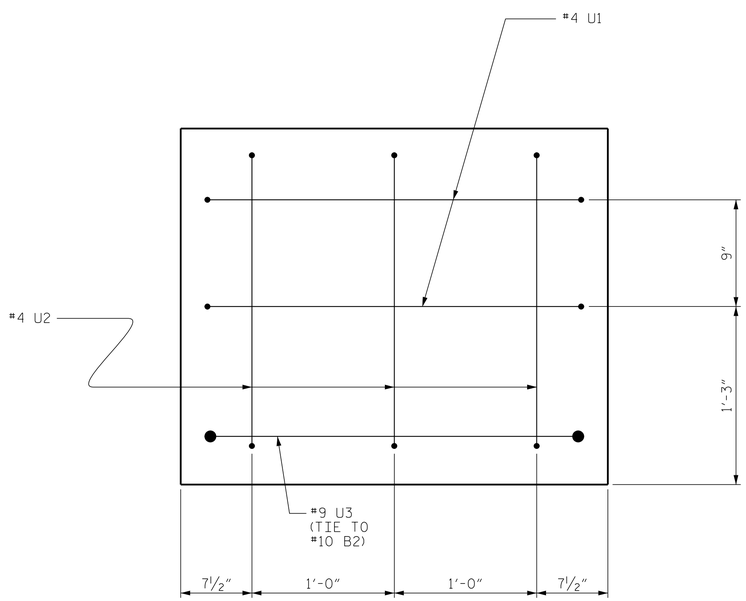


## END OF CAP VIEW

(TYPICAL BOTH ENDS)

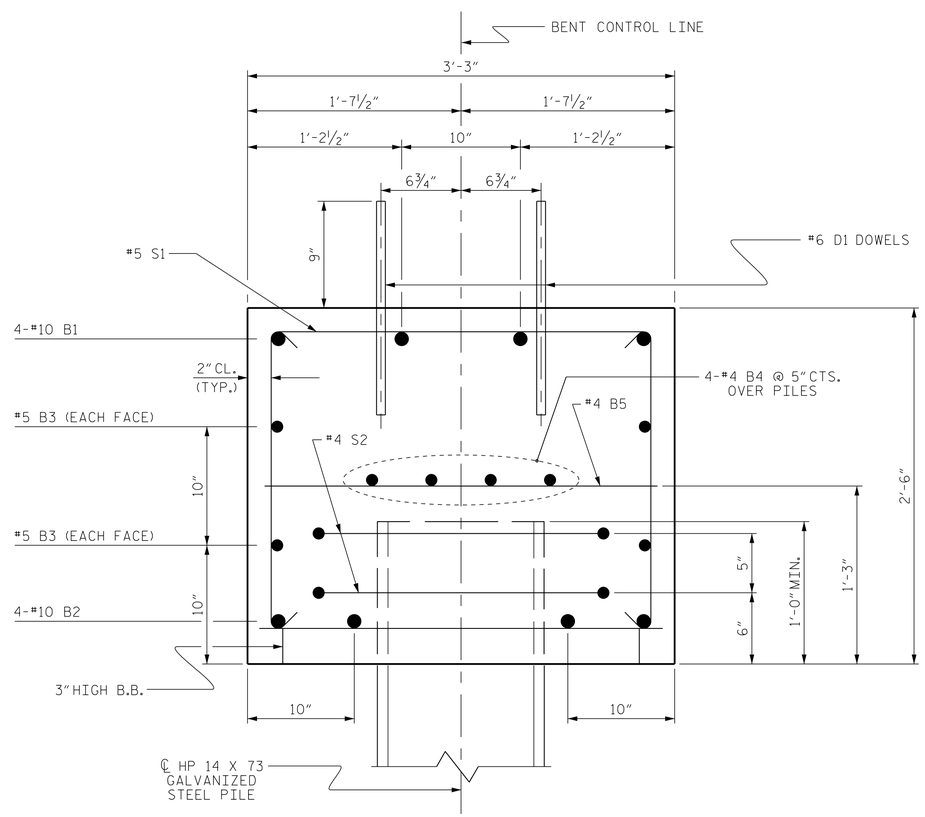


## SECTION A-A

PROJECT NO. 17BP.1.R.79

NORTHAMPTON COUNTY

STATION: 15+83.50 -L-

SHEET 2 OF 2

ENGINEER OF RECORD
4/10/2018

NORTH CAROLINA PROFESSIONAL SEAL 14091 ENGINEER BUCK CHARLES HUNT

DocuSigned by: Buck Charles Hunt
2F15CB0973BA4EC...

WETHERILL ENGINEERING

1223 Jones Franklin Rd.
Raleigh, N.C. 27606
Bus: 919 851 8077
Fax: 919 851 8107
LICENSE NO. F-0377

STATE OF NORTH CAROLINA
DEPARTMENT OF TRANSPORTATION
RALEIGH

SUBSTRUCTURE

BENT No. 1

| REVISIONS | | | | | | SHEET NO. |
|---|---|---|---|---|---|---|
| NO. | BY: | DATE: | NO. | BY: | DATE: | S-14 |
| 1 | | | 3 | | | TOTAL SHEETS |
| 2 | | | 4 | | | 19 |

DRAWN BY : J. PENDERGRAFT DATE : 9-17
CHECKED BY : B.C. HUNT DATE : 9-17

DOCUMENT NOT CONSIDERED FINAL UNLESS ALL SIGNATURES COMPLETED

P:\2017\17118.0.1_Northampton-10\Structures\DGN\NORTHAMPTON 10 BT.dgn
4/10/2018 9:32:47 AM