DocuSign Envelope ID: 85A5664C-570F-47C7-8C38-D5CF185A29D5

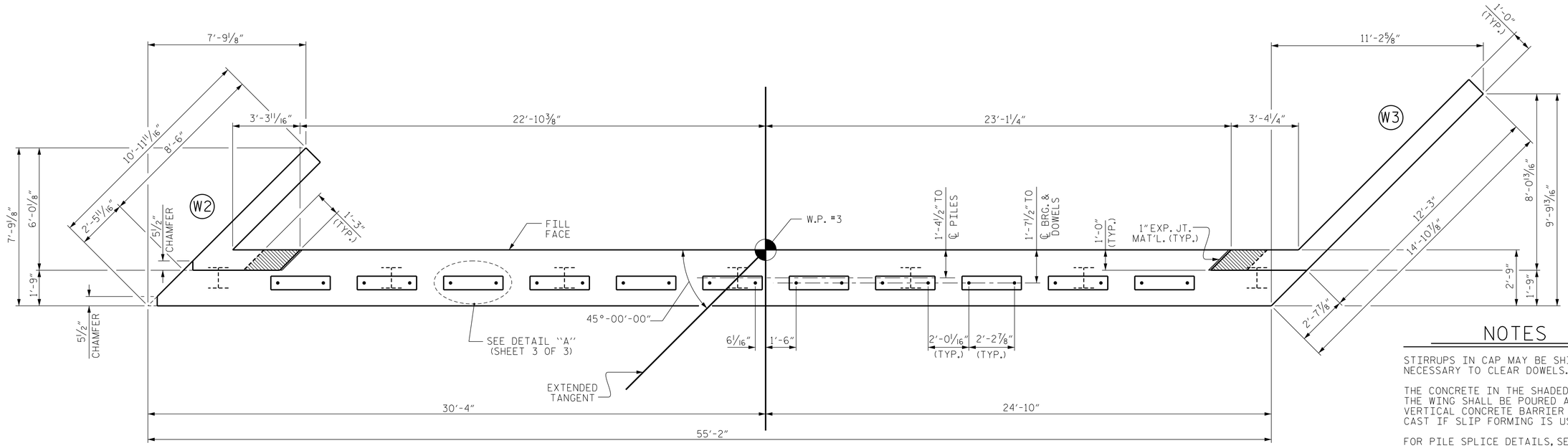


## PLAN

## NOTES

STIRRUPS IN CAP MAY BE SHIFTED AS NECESSARY TO CLEAR DOWELS.

THE CONCRETE IN THE SHADED AREA OF THE WING SHALL BE POURED AFTER THE VERTICAL CONCRETE BARRIER RAIL IS CAST IF SLIP FORMING IS USED.

FOR PILE SPLICE DETAILS, SEE SHEET 3 OF 3.

GALVANIZE THE FULL LENGTH OF EACH END BENT PILE IN ACCORDANCE WITH SECTION 1076 OF THE STANDARD SPECIFICATIONS.

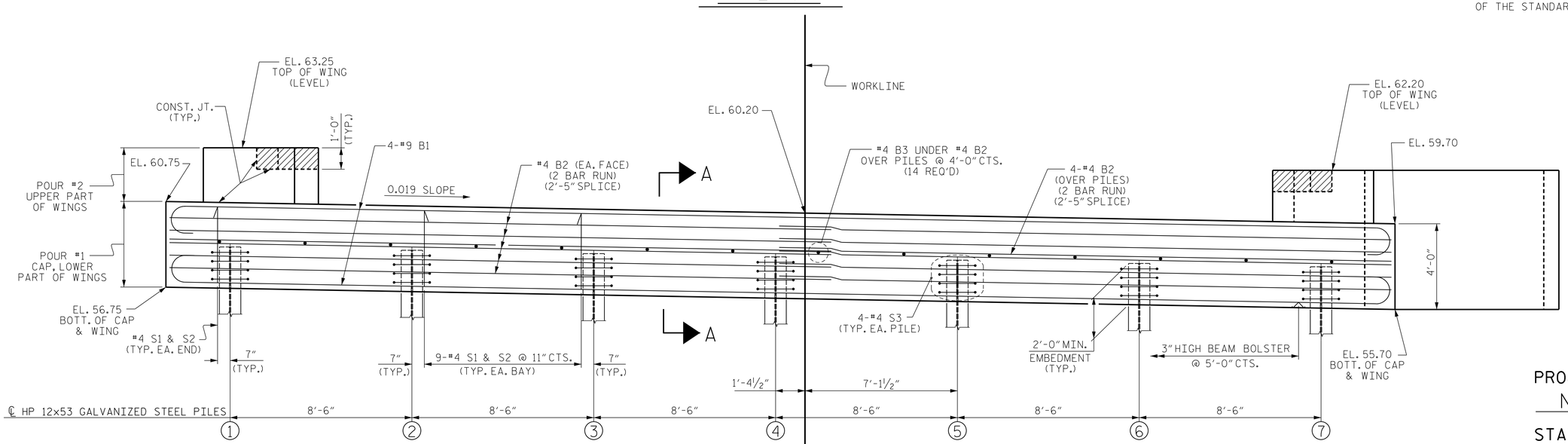


## ELEVATION

FOR SECTION A-A, SEE SHEET 3 OF 3.

| TOP OF PILE ELEVATIONS | |
|---|---|
| 1 | 58.71 |
| 2 | 58.55 |
| 3 | 58.39 |
| 4 | 58.23 |
| 5 | 58.06 |
| 6 | 57.90 |
| 7 | 57.74 |

PROJECT NO. 17BP.1.R.79

NORTHAMPTON COUNTY

STATION: 15+83.50 -L-

SHEET 1 OF 3

ENGINEER OF RECORD
4/10/2018

NORTH CAROLINA PROFESSIONAL SEAL 14091 ENGINEER BUCK CHARLES HUNT

DocuSigned by: Buck Charles Hunt
2F15CB3973BA46C...

WETHERILL ENGINEERING
1223 Jones Franklin Rd.
Raleigh, N.C. 27606
Bus: 919 851 8077
Fax: 919 851 8107
LICENSE NO. F-0377

STATE OF NORTH CAROLINA
DEPARTMENT OF TRANSPORTATION
RALEIGH

SUBSTRUCTURE

END BENT No. 2

| REVISIONS | | | | | | SHEET NO. |
|---|---|---|---|---|---|---|
| NO. | BY: | DATE: | NO. | BY: | DATE: | S-15 |
| 1 | | | 3 | | | TOTAL SHEETS |
| 2 | | | 4 | | | 19 |

DOCUMENT NOT CONSIDERED FINAL UNLESS ALL SIGNATURES COMPLETED

DRAWN BY : D. HODGE DATE : 6/17
CHECKED BY : B.C. HUNT DATE : 6/17

P:\2017\17118.01_Northampton-10\Structures\DGN\NORTHAMPTON 10 EBT.dgn
4/10/2018 9:34:57 AM