DocuSign Envelope ID: 85A5664C-570F-47C7-8C38-D5CF185A29D5

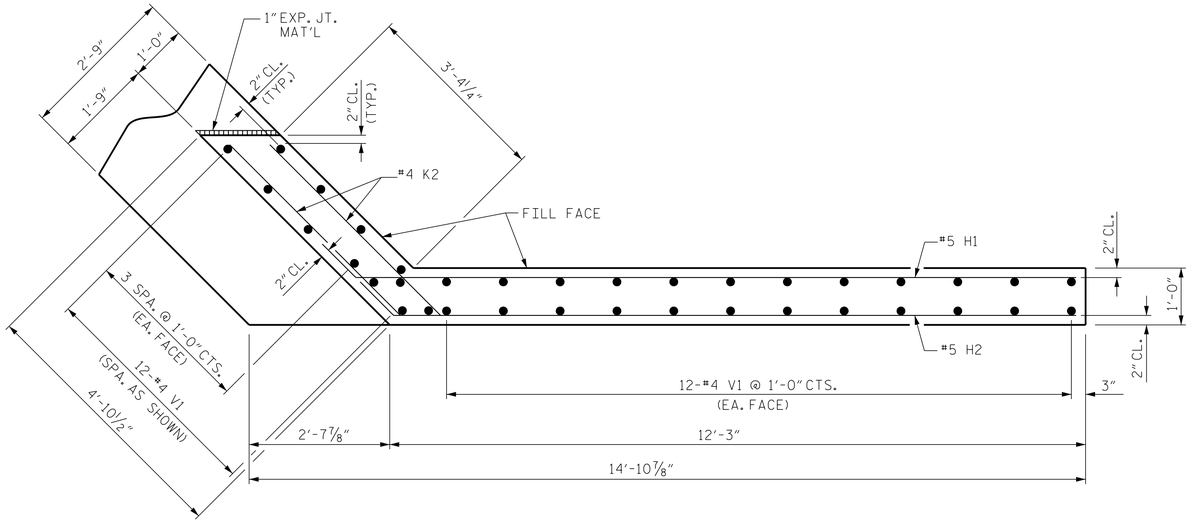

PLAN OF WING (W3)

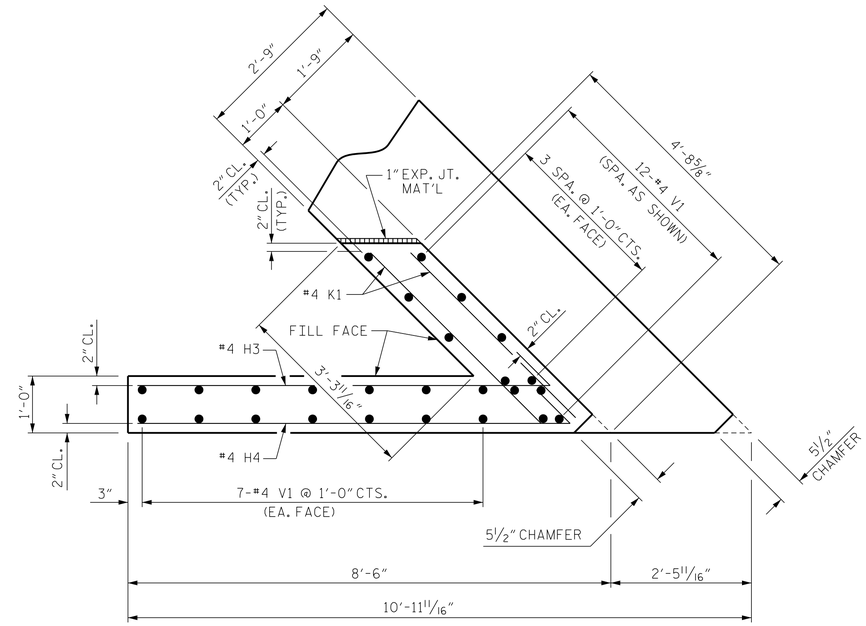

PLAN OF WING (W2)

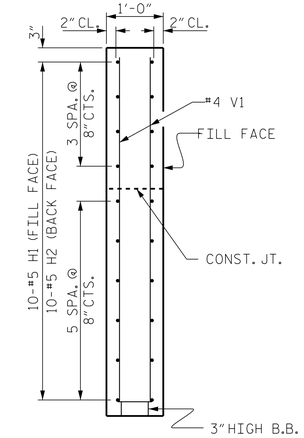

SECTION X-X

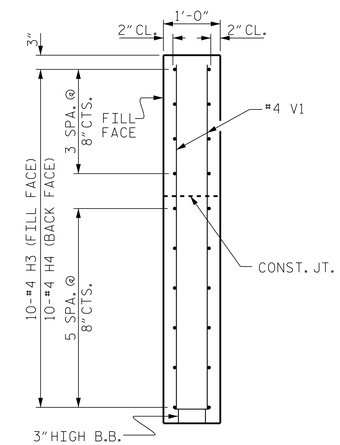

SECTION Y-Y

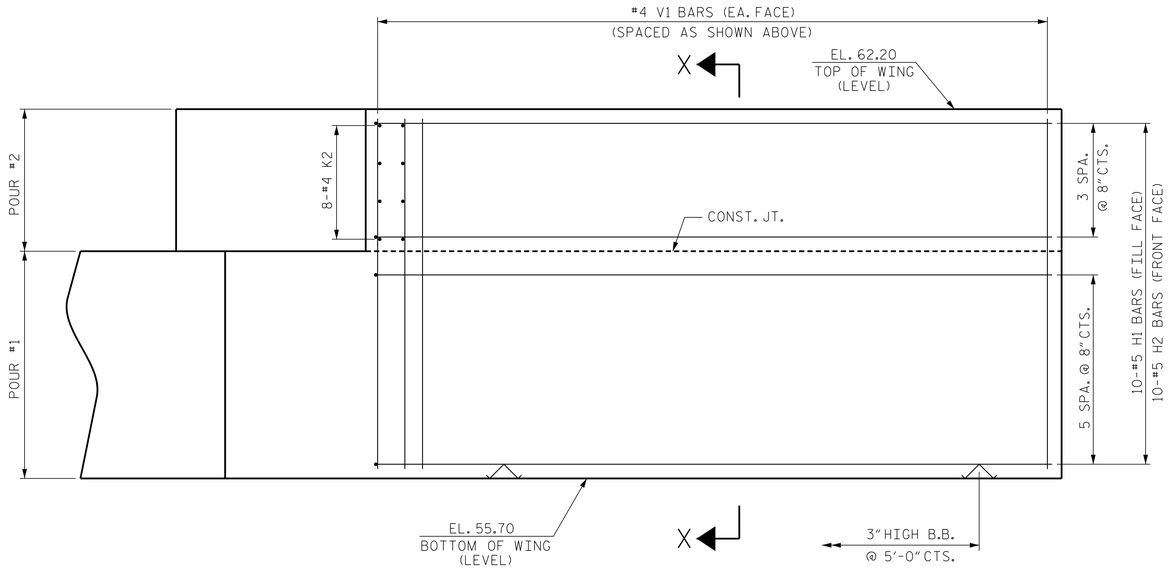

ELEVATION OF WING (W3)

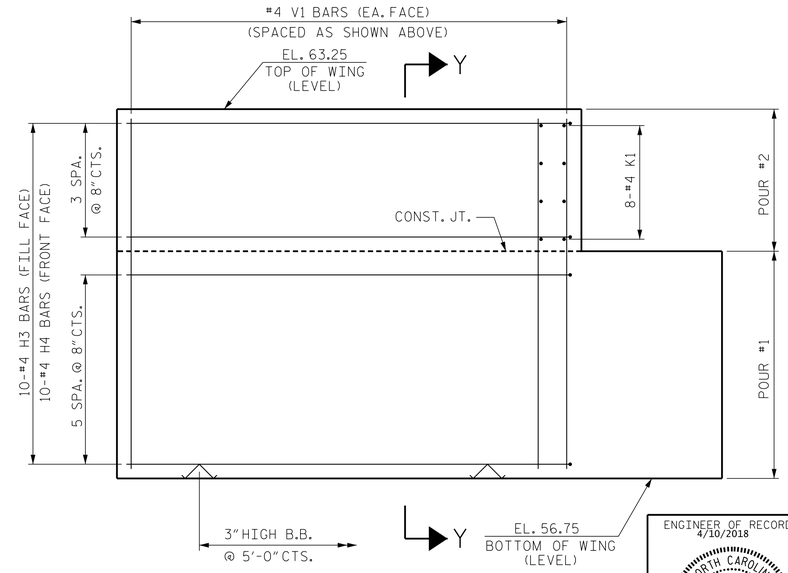

ELEVATION OF WING (W2)

PROJECT NO. 17BP.1.R.79
NORTHAMPTON COUNTY
STATION: 15+83.50 -L-

SHEET 2 OF 3

STATE OF NORTH CAROLINA
DEPARTMENT OF TRANSPORTATION
RALEIGH

SUBSTRUCTURE

END BENT No. 2

ENGINEER OF RECORD
4/10/2018
NORTH CAROLINA PROFESSIONAL SEAL 14091 ENGINEER BUCK CHARLES HUNT

DocuSigned by: Buck Charles Hunt
2F15C83073BA4E0...

WETHERILL ENGINEERING
1223 Jones Franklin Rd.
Raleigh, N.C. 27606
Bus: 919 851 8077
Fax: 919 851 8107
LICENSE NO. F-0377

REVISIONS						SHEET NO.
NO.	BY:	DATE:	NO.	BY:	DATE:	S-16
1			3			TOTAL SHEETS
2			4			19

DOCUMENT NOT CONSIDERED FINAL UNLESS ALL SIGNATURES COMPLETED

DRAWN BY : D. HODGE DATE : 6/17
CHECKED BY : B.C. HUNT DATE : 6/17

P:\2017\171801_Northampton-10\Structures\DGN\NORTHAMPTON 10 EBT.dgn
4/10/2018 9:37:23 AM