DocuSign Envelope ID: 85A5664C-570F-47C7-8C38-D5CF185A29D5

NOTES

STIRRUPS IN CAP MAY BE SHIFTED AS NECESSARY TO CLEAR DOWELS.

★ INVERT ALTERNATE STIRRUPS.

GALVANIZE THE FULL LENGTH OF EACH INTERIOR BENT PILE IN ACCORDANCE WITH SECTION 1076 OF THE STANDARD SPECIFICATIONS.

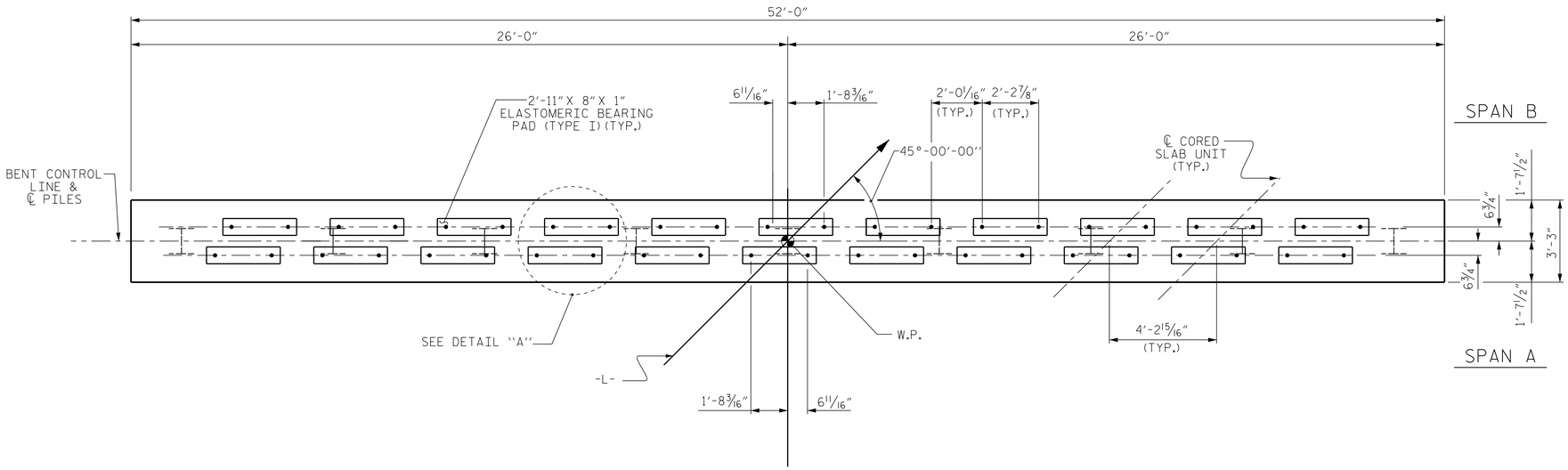

PLAN

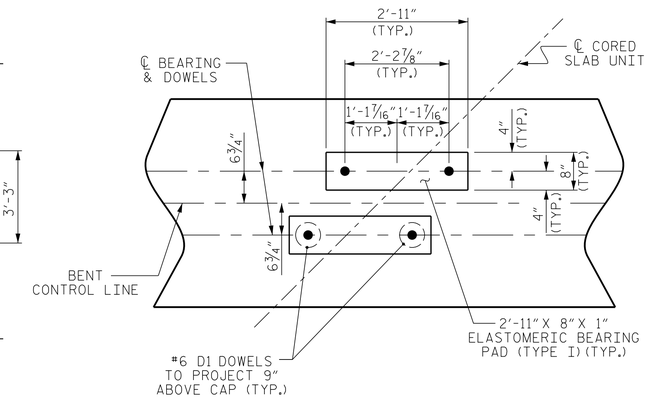

DETAIL "A"

(DIMENSIONS ARE TYPICAL EACH BEARING)

TOP OF PILE ELEVATIONS	
1	58.98
2	58.87
3	58.75
4	58.63
5	58.53
6	58.41
7	58.30
8	58.18
9	58.07

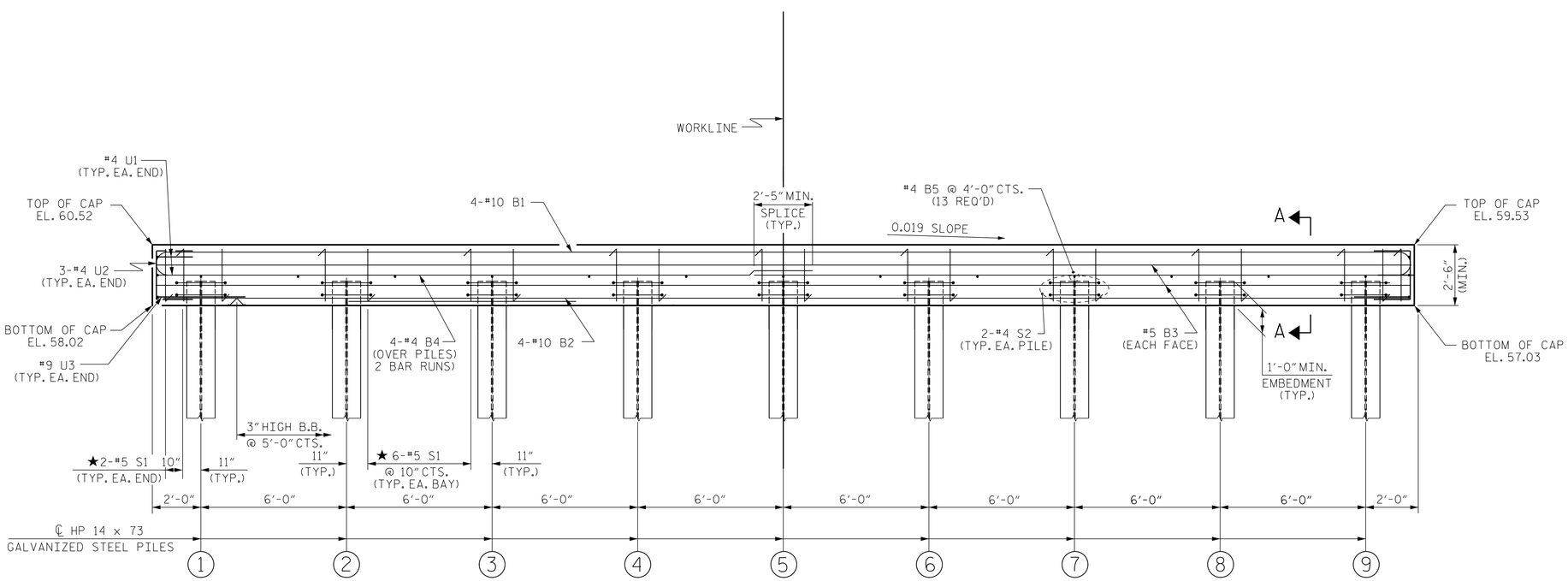

ELEVATION

FOR SECTION A-A, SEE SHEET 2 OF 2

PROJECT NO. 17BP.1.R.79

NORTHAMPTON COUNTY

STATION: 15+83.50 -L-

SHEET 1 OF 2

ENGINEER OF RECORD
4/10/2018

NORTH CAROLINA PROFESSIONAL SEAL 14091 ENGINEER BUCK CHARLES HUNT

DocuSigned by: Buck Charles Hunt
2F15C8397 3B4AEC...

WETHERILL ENGINEERING

1223 Jones Franklin Rd.
Raleigh, N.C. 27606
Bus: 919 851 8077
Fax: 919 851 8107
LICENSE NO. F-0377

STATE OF NORTH CAROLINA
DEPARTMENT OF TRANSPORTATION
RALEIGH

SUBSTRUCTURE

BENT No. 1

REVISIONS								SHEET NO.
NO.	BY:	DATE:	NO.	BY:	DATE:			S-13
1			3					TOTAL SHEETS
2			4					19

DRAWN BY : J. PENDERGRAFT DATE : 9-17
CHECKED BY : B. C. HUNT DATE : 9-17

DOCUMENT NOT CONSIDERED FINAL UNLESS ALL SIGNATURES COMPLETED

P:\2017\17118.0.1_Northampton-10\Structures\DGN\NORTHAMPTON 10 BT.dgn
4/10/2018 9:51:37 AM