DocuSign Envelope ID: 57C6AD12-AE75-45E1-812C-19027389CE60

PROJECT REFERENCE NO.	SHEET NO.

DOCUMENT NOT CONSIDERED FINAL UNLESS ALL SIGNATURES COMPLETED

STATE OF NORTH CAROLINA
DEPT. OF TRANSPORTATION
DIVISION OF HIGHWAYS
RALEIGH, N.C.

ROADWAY DETAIL DRAWING FOR
GUARDRAIL INSTALLATION

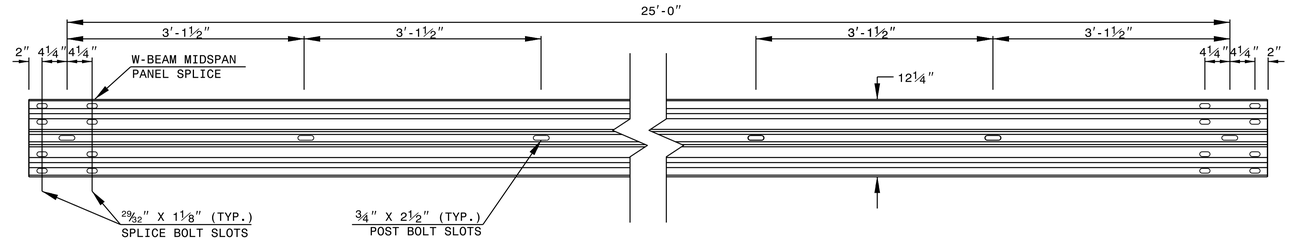

STANDARD W-BEAM GUARDRAIL

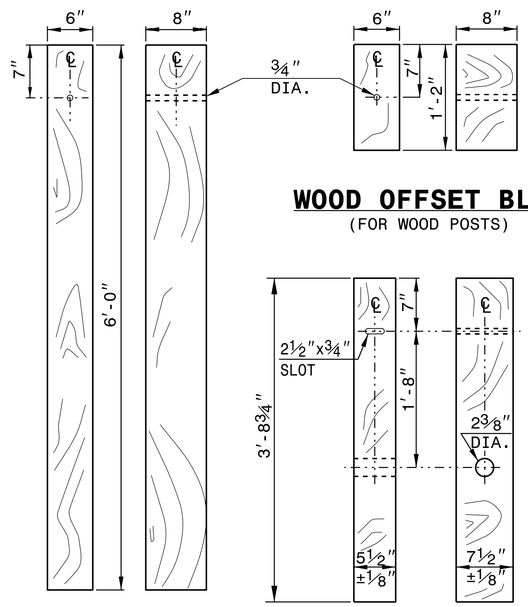

STANDARD LINE POST

WOOD OFFSET BLOCK
(FOR WOOD POSTS)

SHORT WOOD BREAKAWAY POST

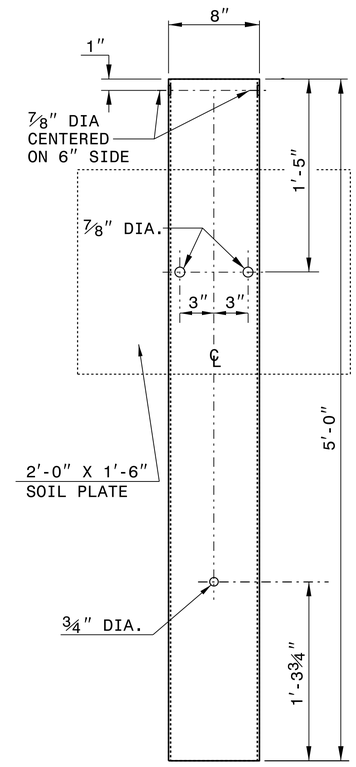

STEEL TUBE
TS 6"x8"x0.1875"

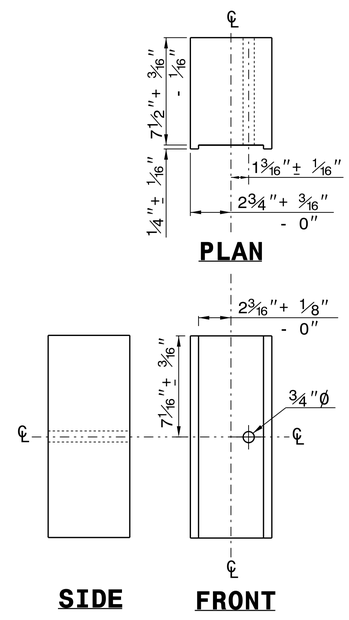

ROUTED OFFSET BLOCK

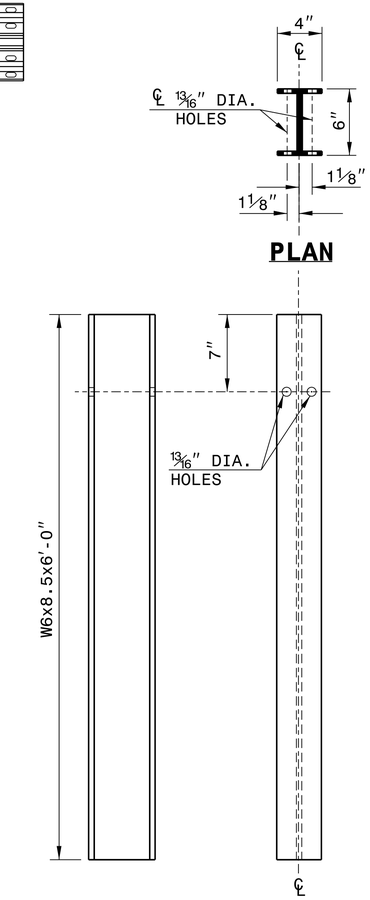

"W6" STEEL POST

SYSTEM PARTS

SHEET 6 OF 8
862D02

STATE OF NORTH CAROLINA
DEPT. OF TRANSPORTATION
DIVISION OF HIGHWAYS
RALEIGH, N.C.

ROADWAY DETAIL DRAWING FOR
GUARDRAIL INSTALLATION

SHEET 6 OF 8
862D02

DocuSigned by: Joel S. Howerton
B7B9D7D7DC0C4D7...

NORTH CAROLINA PROFESSIONAL SEAL 022966 ENGINEER JOEL S. HOWERTON

6/7/2018 3:04:42 PM EDT

CONTRACTS STANDARDS AND DEVELOPMENT UNIT
Office 919-707-6950 FAX 919-250-4119

SEE TITLE BLOCK

ORIGINAL BY: J.HOWERTON DATE: 3-7-2018
MODIFIED BY: DATE:
CHECKED BY: DATE:
FILE SPEC.: