DocuSign Envelope ID: 85A5664C-570F-47C7-8C38-D5CF185A29D5

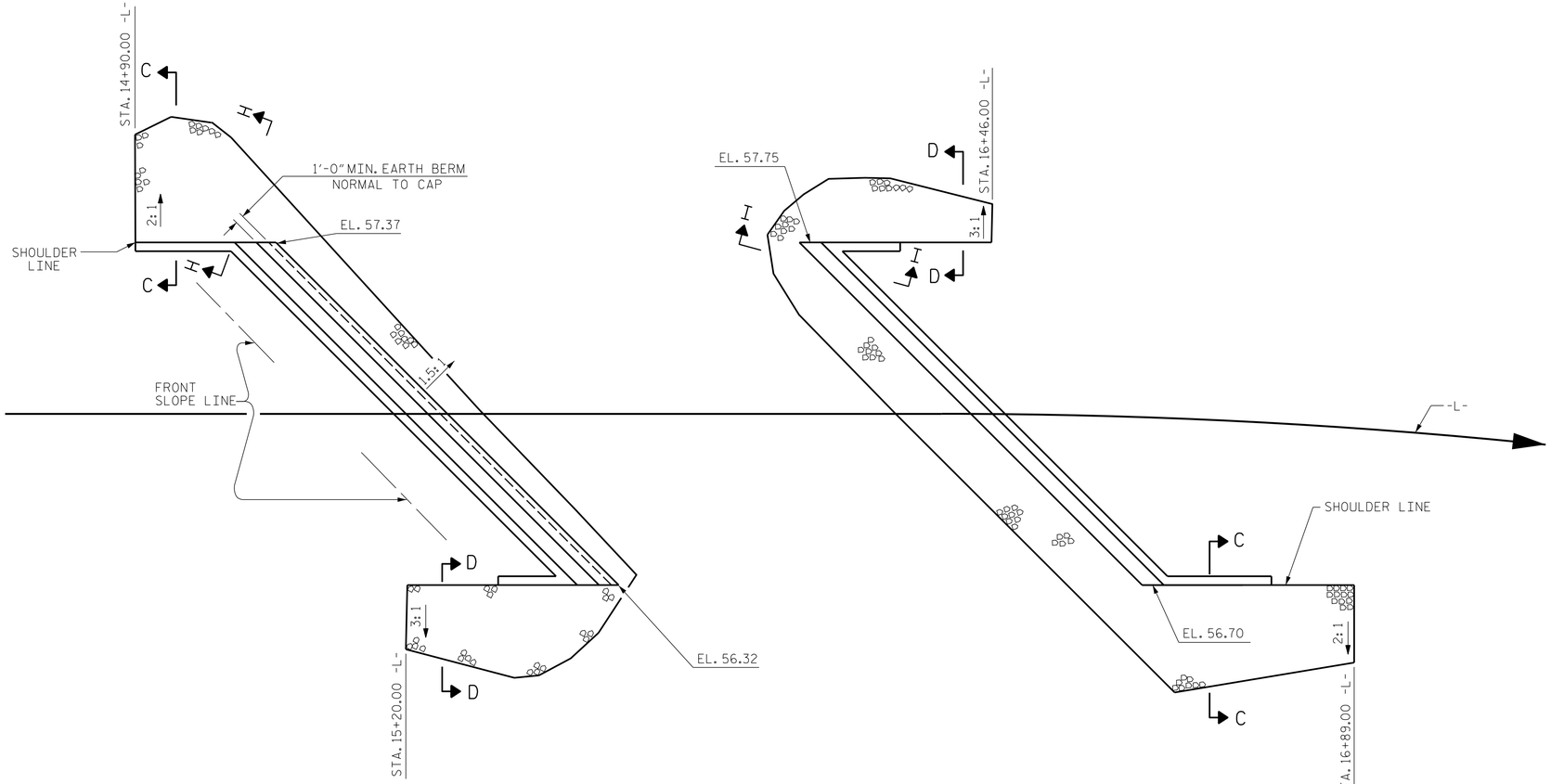

@ END BENT No. 1

PLAN OF RIP RAP

@ END BENT No. 2

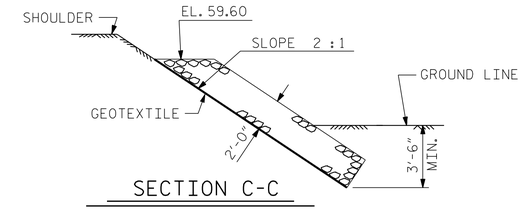

SECTION C-C

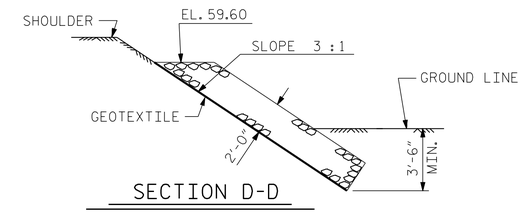

SECTION D-D

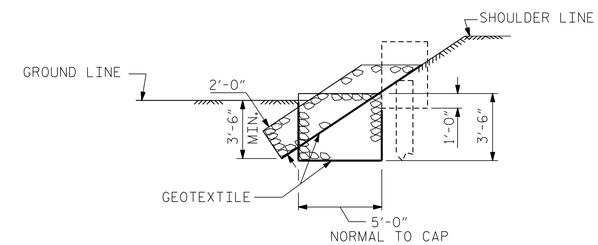

SECTION I-I

ESTIMATED QUANTITIES		
BRIDGE @ STA. 15+83.50 -L-	RIP RAP CLASS II	GEOTEXTILE FOR DRAINAGE
	TONS	SQUARE YARDS
END BENT No. 1	85	90
END BENT No. 2	100	110
TOTAL	185	200

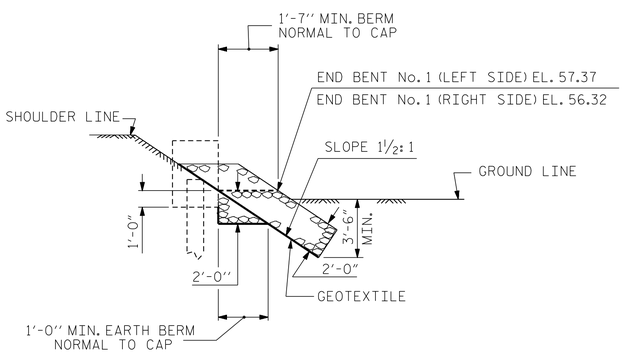

SECTION H-H

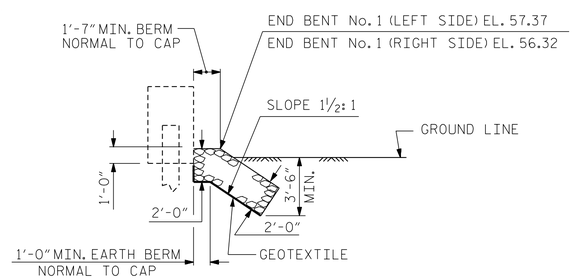

℄ SECTION
BERM RIP RAPPED
@ END BENT No. 1

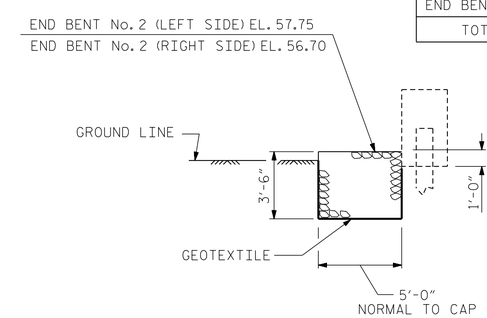

℄ SECTION
BERM RIP RAPPED
@ END BENT No. 2

PROJECT NO. 17BP.1.R.79
NORTHAMPTON COUNTY
STATION: 15+83.50 -L-

ENGINEER OF RECORD
4/10/2018
NORTH CAROLINA PROFESSIONAL SEAL 14091 ENGINEER BUCK CHARLES HUNT
DocuSigned by: Buck Charles Hunt
2F15C85973BA4DC...

WETHERILL ENGINEERING
1223 Jones Franklin Rd.
Raleigh, N.C. 27606
Bus: 919 851 8077
Fax: 919 851 8107
LICENSE NO. F-0377

STATE OF NORTH CAROLINA
DEPARTMENT OF TRANSPORTATION
RALEIGH

STANDARD

RIP RAP DETAILS

REVISIONS								SHEET NO.
NO.	BY:	DATE:	NO.	BY:	DATE:			S-18
1			3					TOTAL SHEETS
2			4					19

DOCUMENT NOT CONSIDERED FINAL UNLESS ALL SIGNATURES COMPLETED

ASSEMBLED BY : J. PENDERGRAFT/DAH		DATE :	6/17
CHECKED BY : B.C. HUNT		DATE :	6/17
DRAWN BY : REK 1/84	REV. 5/1/06R		TLA/GM
CHECKED BY : RDU 1/84	REV. 10/1/11		MAA/GM
	REV. 12/21/11		MAA/GM

P:\2017\17118.01_Northampton-10\Structures\DGN\NORTHAMPTON 10 SP.dgn
4/10/2018 9:40:51 AM

STD. NO. RR1